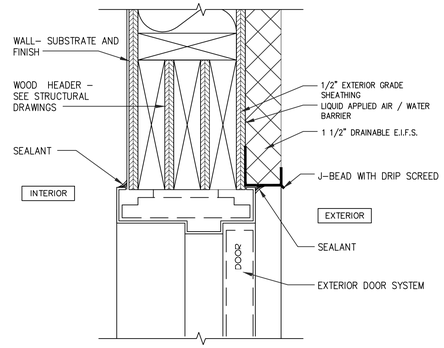


## 1 / A601 HOLLOW METAL DOOR HEAD

SCALE: 3"=1'-0"

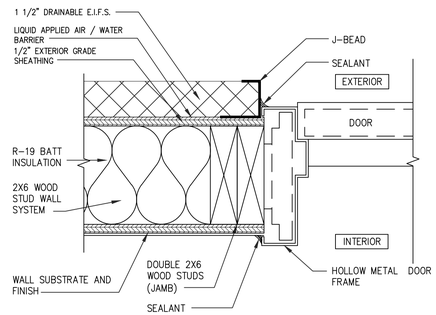


## 2 / A601 HOLLOW METAL DOOR JAMB

SCALE: 3"=1'-0"

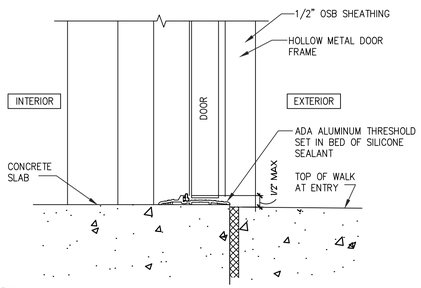


## 3 / A601 HOLLOW METAL DOOR THRESHOLD

SCALE: 3"=1'-0"

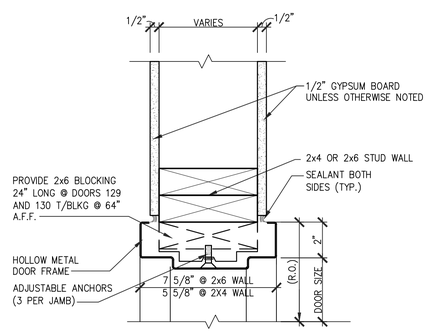


## INTERIOR HOLLOW METAL DOOR FRAME

4 / A601

SCALE: 3"=1'-0"

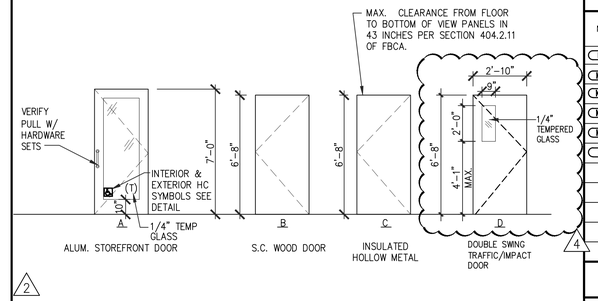


## DOOR TYPES

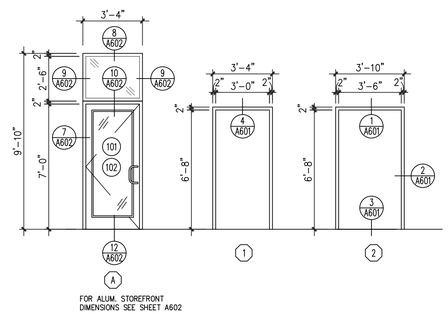


FOR ALUM. STOREFRONT DIMENSIONS SEE SHEET A602

## DOOR FRAMES

## DOOR SCHEDULE

| NO. | DOOR TYPE | DOOR SIZE | DOOR MATERIAL | DOOR FIN. | FRAME F.R. | FRAME MAT. | FRAME FIN. | FRAME TYPE | HARDWARE | REMARKS |
|---|---|---|---|---|---|---|---|---|---|---|
| 101 | A | 3'-0" x 7'-0" | AL/GL | AN | | AL | AN | A | 1 | -- |
| 102 | A | 3'-0" x 7'-0" | AL/GL | AN | | AL | AN | A | 1 | -- |
| 105 | B | 3'-0" x 6'-8" x 1 3/4" | S.C. WOOD | PNT | | HM | PNT | 1 | 3 | -- |
| 106 | B | 3'-0" x 6'-8" x 1 3/4" | S.C. WOOD | PNT | | HM | PNT | 1 | 3 | -- |
| 107 | D | 2'-10" x 6'-8" x 1 3/4" 4 | AL | AN | | HM | PNT | 1 | 4 | -- |
| 112 | C | 3'-6" x 6'-8" x 1 3/4" | INSUL HM | PNT | | HM | PNT | 2 | 2 | -- |

## HARDWARE SCHEDULE

HARDWARE SET #1 - SECONDARY SINGLE ENTRY DOOR & RUNNER DOOR
THIS HARDWARE GROUP TO BE PROVIDED AS PART OF THE ALUMINUM ENTRANCE PACKAGE AND SHALL BE MANUFACTURER'S BEST QUALITY SYSTEM.
* PERIMETER WEATHERSTRIPPING BY DOOR / FRAME MFR.

HINGES: IVES CONTINUOUS HINGES 112HD - 628
LOCK: TOUCHBAR EXIT DEVICE (VON DUPRIN 35A-NL-OP-388-299 FINISH - 628
SCHLAGE RIM CYLINDER 20-057 - 628 -
BOLTS: MANUFACTURER'S STANDARD FLUSH BOLTS
CLOSER: LCN 4111 EDA WITH HEAVY DUTY HARDWARE FINISH - 689
CLOSER MOUNT: LCN 4110-18 FINISH - 689
BLADE SPACER: LCN 4110-61 FINISH - 689
THRESHOLD: ALUMINUM - ZERO 625A-MSLA-10 MEETS ADA REQUIREMENTS
SWEEP: ZERO 39A - ALUM.
OH STOPS: GLYNN 100S FINISH - 630
PULL: IVES 8190HD 90 DEG OFFSET 10" FINISH - 630

HARDWARE SET #2 - REAR EXTERIOR DOOR
HINGES: IVES 224HD CONTINUOUS HINGE - 628
LOCK: SCHLAGE D SERIES "RHODES" STOREROOM LOCK IN 628 FINISH
LOCK GUARD: IVES LG12 - 630 - COORDINATE WITH LOCK
CLOSERS: LCN 4111 SH CUSH. WITH INTEGRAL STOP - 689
THRESHOLD: ZERO 65A-MSLA-10 - A
WEATHERSTRIPING: FULL - PEMKO OR EQUAL
KICK PLATE: IVES 8400 36X24 LDW B-CS - 630
DOOR SWEEP: ZERO 328 AA OR 39A
GASKET: ZERO 429A - A (* MOUNT PRIOR TO MOUNTING CLOSER)
RAIN DRIP: ZERO 142A - A

HARDWARE SET #3 - RESTROOM ENTRY DOOR
HINGES: 1 1/2 PAIR BUTTS, HAGER BB-1279 26D
PULL: ROUND WROUGHT DOOR PULL, HAGER 3 26D
PUSH: PUSH PLATE, HAGER 30S 8X16
STOP: FLOOR STOP, HAGER 241F US26
CLOSERS: HAGER 5200 MLT 1-4 ALM
KICK PLATE: HAGER 214S

HARDWARE SET #4 - ELIASON DOORS TO PREP AREA
HARDWARE: BY DOOR MANUFACTURER
STOP: 1420 626 SURFACE APPLIED STOP 2

## ABBREVIATIONS

| | | | |
|---|---|---|---|
| AL | ALUMINUM | MTL | METAL |
| AN | ANODIZED FINISH | PNT | PAINT |
| FAC | FACTORY FINISH | S&S | STAINED & SEALED |
| FBGL | FIBERGLASS | SCWD | SOLID CORE WOOD |
| GL | GLASS | STL | STAINLESS STEEL |
| HCWD | HOLLOW CORE WOOD | WD | WOOD |
| HM | HOLLOW METAL | WVC | WOOD VINYL CLAD |
| MDF | MEDIUM DENSITY FIBERBOARD | | |

## GENERAL DOOR NOTES

1. ALL DOORS/DOOR OPENINGS SHALL COMPLY WITH INTERNATIONAL CODE LATEST EDITION / NFPA 101 LIFE SAFETY CODE 7.2.1.2 WIDTH 7.2.1.4 SWING AND FORCE TO OPEN 7.2.1.5 LOCKS AND LATCHES AND ALARM DEVICES 7.2.1.6 SPECIAL LOCKING ARRANGEMENTS 7.2.1.7 PANIC HARDWARE AND FIRE EXIT DEVICES 7.2.1.8 SELF CLOSING DEVICES
2. ALL DOOR HANDLES SHALL BE LEVER TYPE MEETING A.D.A. REQUIREMENTS.
3. ALL DOORS WITH AUTO CLOSERS SHALL HAVE BALL BEARING TYPE HINGES
4. ALL EXTERIOR DOORS SHALL HAVE US28 FINISH HINGES.
5. ALL EXTERIOR DOORS SHALL HAVE WEATHER STRIPPING.
6. DOOR CLOSER SHALL BE INSTALLED SUCH THAT THE SWEEP PERIOD OF THE CLOSER SHALL BE ADJUSTED SO THAT FROM AN OPEN POSITION OF 70°, THE DOOR WILL TAKE AT LEAST 3 SECONDS TO MOVE TO A POINT 3 INCHES (76MM) FROM THE LATCH, MEASURED TO THE LEADING EDGE OF THE DOOR.
7. THE MAXIMUM FORCE FOR PUSHING OR PULLING OPEN AN EXTERIOR DOOR SHALL NOT EXCEED 8.5LBF (37.5N).
8. SUBMIT HARDWARE SCHEDULE AND REVIEW WITH ARCHITECT PRIOR TO PLACING ORDER.
9. CONTRACTOR TO FIELD VERIFY ALL OPENING SIZES BEFORE ORDERING
10. PROVIDE WALL OR FLOOR DOOR STOP AT ALL DOORS TYPICAL
11. ALL STOREFRONT DOORS AND FRAMES TO HAVE CLEAR ANODIZED FINISH.
12. ALL EXTERIOR STOREFRONT DOORS ARE TO BE 9/16" CLEAR GLAZING. YES 45 OR EQUAL.
13. REFER TO MANUFACTURER SPECIFICATIONS FOR INSTALLATION REQUIREMENTS.
14. ALL EXTERIOR DOORS TO HAVE 4" HEADS U.N.O.

LMHT Project No. 21318

THIS DRAWING IS THE PROPERTY OF THE ARCHITECT AND MAY NOT BE REPRODUCED OR USED WITHOUT HIS WRITTEN PERMISSION

INRD national restaurant designers
ARCHITECTS & ENGINEERS
7208 ACC Blvd, second floor, Raleigh, NC 27617
ph: 919 544 9387 fax: 919 544 9399
A Division of LMHT Associates

2

GLEN R. LEHMAN REGISTERED ARCHITECT 3177 NORTH CAROLINA INDIVIDUAL ARCHITECT
12/23/22

PROJECT: HIGHWAY 55
3.0 PROTOTYPE
1424 CURTIS BRIDGE ROAD
WILKESBORO, NC 28697

DRAWING: DOOR SCHEDULE

Revisions

THRU ADDENDUM "A" 01/20/2022

2 EQUIP. UPDATE - 06.24.2022

4 SITE PLAN UPDATE-12.23.2022

PROJECT DATE 01/07/2022

Drawn By CIH

Checked By GRL

Sheet No. A601