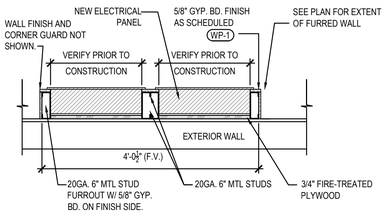

NOTE:
VERIFY ALL WALL PLACEMENT DIMENSIONS W/ ELECTRICAL PANEL SIZE. SPACING & MOUNTING HEIGHT REQUIREMENTS PRIOR TO CONSTRUCTION.

RATED WALLS:
G.C. TO PROVIDE 3M PRODUCT CS-195 COMPOSITE SHEETS AND INSTALL PER MANUFACTURERS RECOMMENDATIONS OR FIRE BLANKETS APPROVED BY LOCAL AUTHORITIES TO MAINTAIN INTEGRITY OF FIRE RATED WALL.

ELECTRIC PANELS DETAIL 19
Scale= 3/4" = 1'-0" A-403

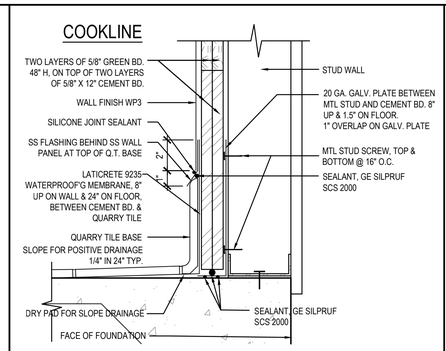

WALL BASE @ COOKLINE 16
Scale= NTS A-403

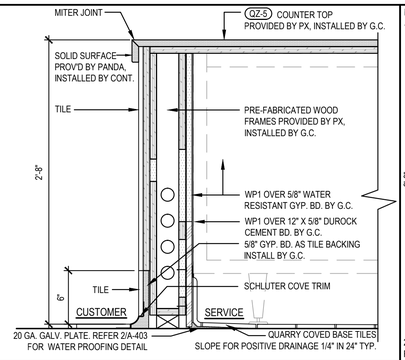

CASHIER COUNTER PLAN & DETAIL 12
Scale= 1 1/2" = 1'-0" A-403

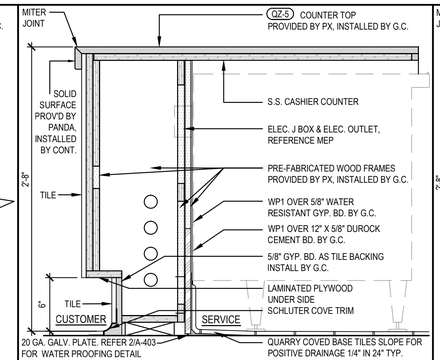

SERVICE COUNTER DETAIL 8
Scale= 1 1/2" = 1'-0" A-403

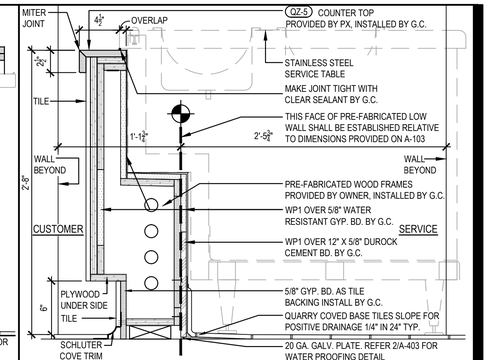

SERVICE COUNTER DETAIL 4
Scale= 1 1/2" = 1'-0" A-403

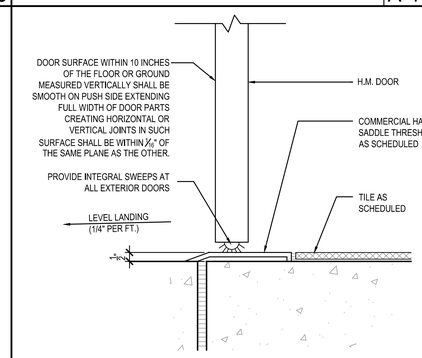

TYP EXTERIOR DOOR SILL DETAIL 15
Scale= 3" = 1'-0" A-403

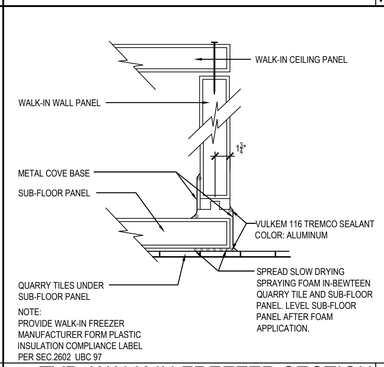

NOTE:
PROVIDE WALK-IN FREEZER MANUFACTURER FORM PLASTIC INSULATION COMPLIANCE LABEL PER SEC.2602 UBC 97

TYP. WALK-IN FREEZER SECTION 11
Scale= 1 1/2" = 1'-0" A-403

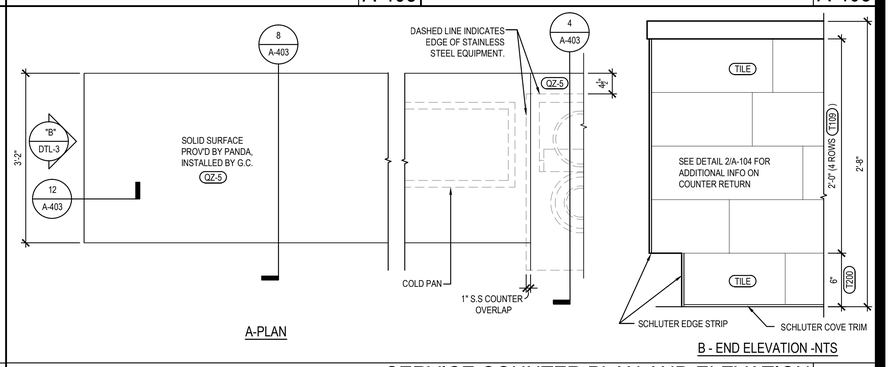

SERVICE COUNTER PLAN AND ELEVATION 3
Scale= 3/4" = 1'-0" A-403

NOT USED 18
Scale= 3" = 1'-0" A-403

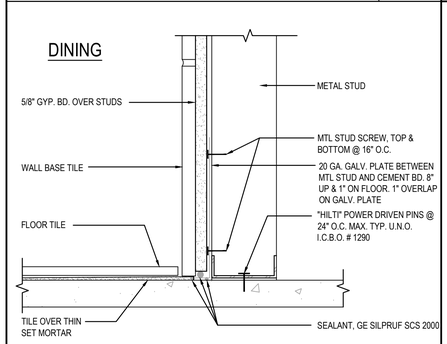

WALL BASE @ DINING ROOM 14
Scale= 3" = 1'-0" A-403

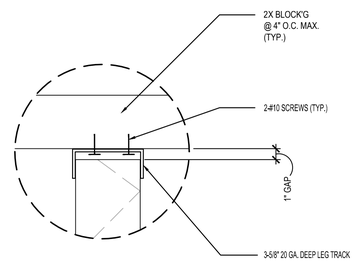

METAL STUD CONNECTION 10
Scale= 1 1/2" = 1'-0" A-403

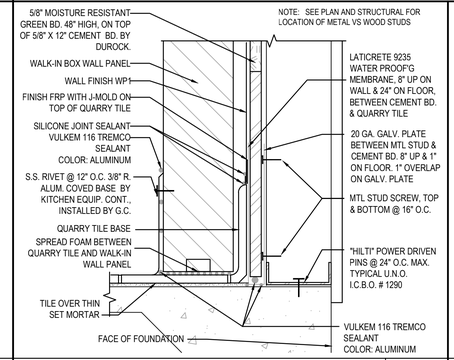

WALL BASE@WALK-IN & STUD WALL 6
Scale= 3" = 1'-0" A-403

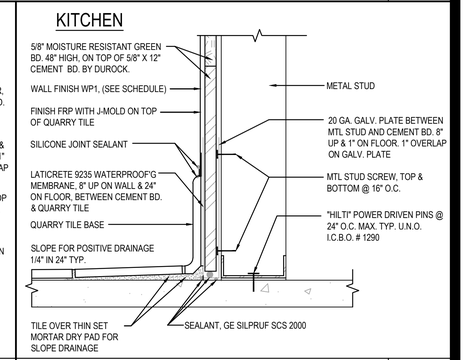

TYP WALL BASE @ KITCHEN 2
Scale= 3" = 1'-0" A-403

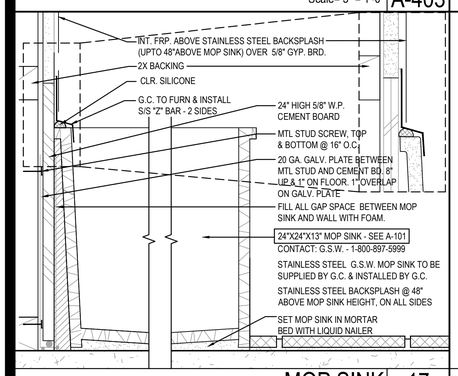

MOP SINK 17
Scale= 3" = 1'-0" A-403

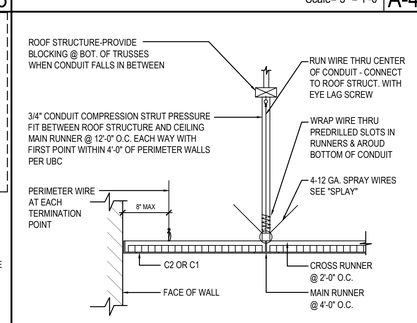

NOTE: THIS DETAIL IS APPLICABLE IN SEISMIC ZONES OR WHERE REQUIRED BY LOCAL CODE.

CEILING DETAIL 13
Scale= 3/4" = 1'-0" A-403

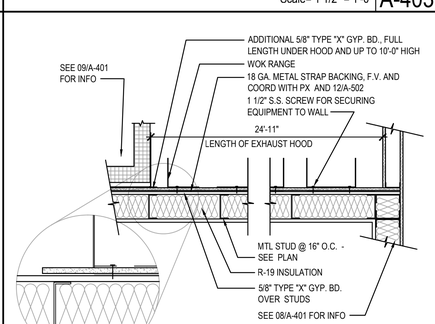

GYP. BOARD BEHIND COOKLINE 9
Scale= NTS A-403

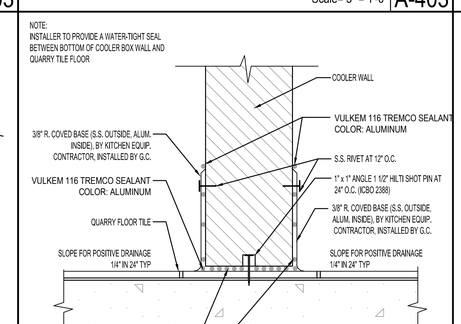

WALK-IN COOLER BASE 5
Scale= 1/4" = 1'-0" A-403

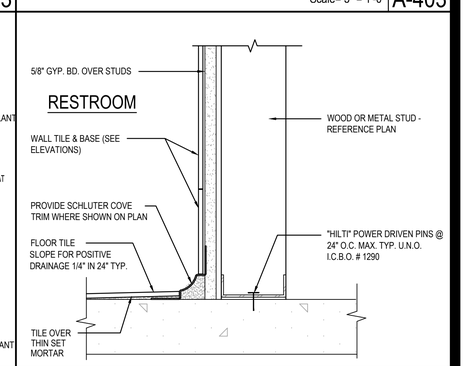

WALL BASE @ RESTROOM 1
Scale= 3" = 1'-0" A-403

PANDA EXPRESS, INC.
1683 Walnut Grove Ave.
Rosemead, California
91770
Telephone: 626.799.9898
Facsimile: 626.372.8288

All ideas, designs, arrangement and plans indicated or represented by this drawing are the property of Panda Express Inc. and were created for use on this specific project. None of these ideas, designs, arrangements or plans may be used by or disclosed to any person, firm, or corporation without the written permission of Panda Express Inc.

REVISIONS:

ISSUE DATE:

1st	ISSUE FOR BUILDING PERMIT	05-09-18
2nd	ISSUE FOR BID	09-07-18

DRAWN BY: RR

PANDA PROJECT #: S8-19-D5937
ARCH PROJECT #: 1803

RANDY REYNOLDS ARCHITECT
1702 MILDARE COURT, THOMPSONS STATION, TN 37179
PHONE (615) 591-0675 FAX (866) 584-1225

STATE OF ALABAMA RANDY REYNOLDS 3886 REGISTERED ARCHITECT 5/9/18

PANDA EXPRESS
Rangeline Road at Halls Mill Road
4429 RANGELINE ROAD
MOBILE, AL
2200 TRUE - R1 - DAB 12

A-403

ARCHITECTURAL DETAILS